## Edge design

Section A-A

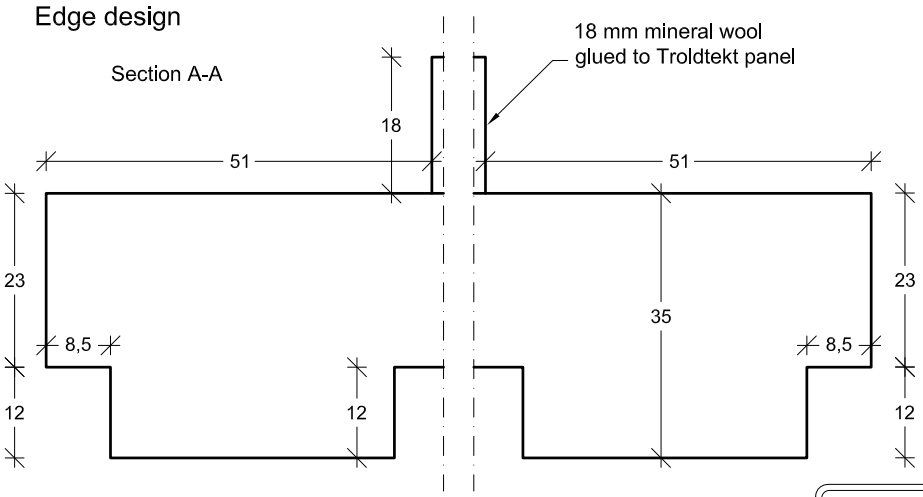


Modular dimensions (mm) : 600 x 1200

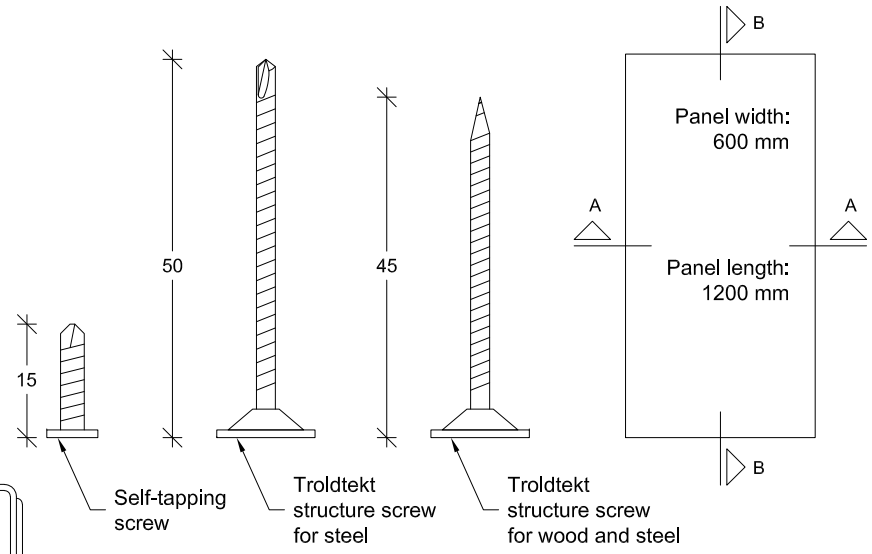


## Cross section A-A

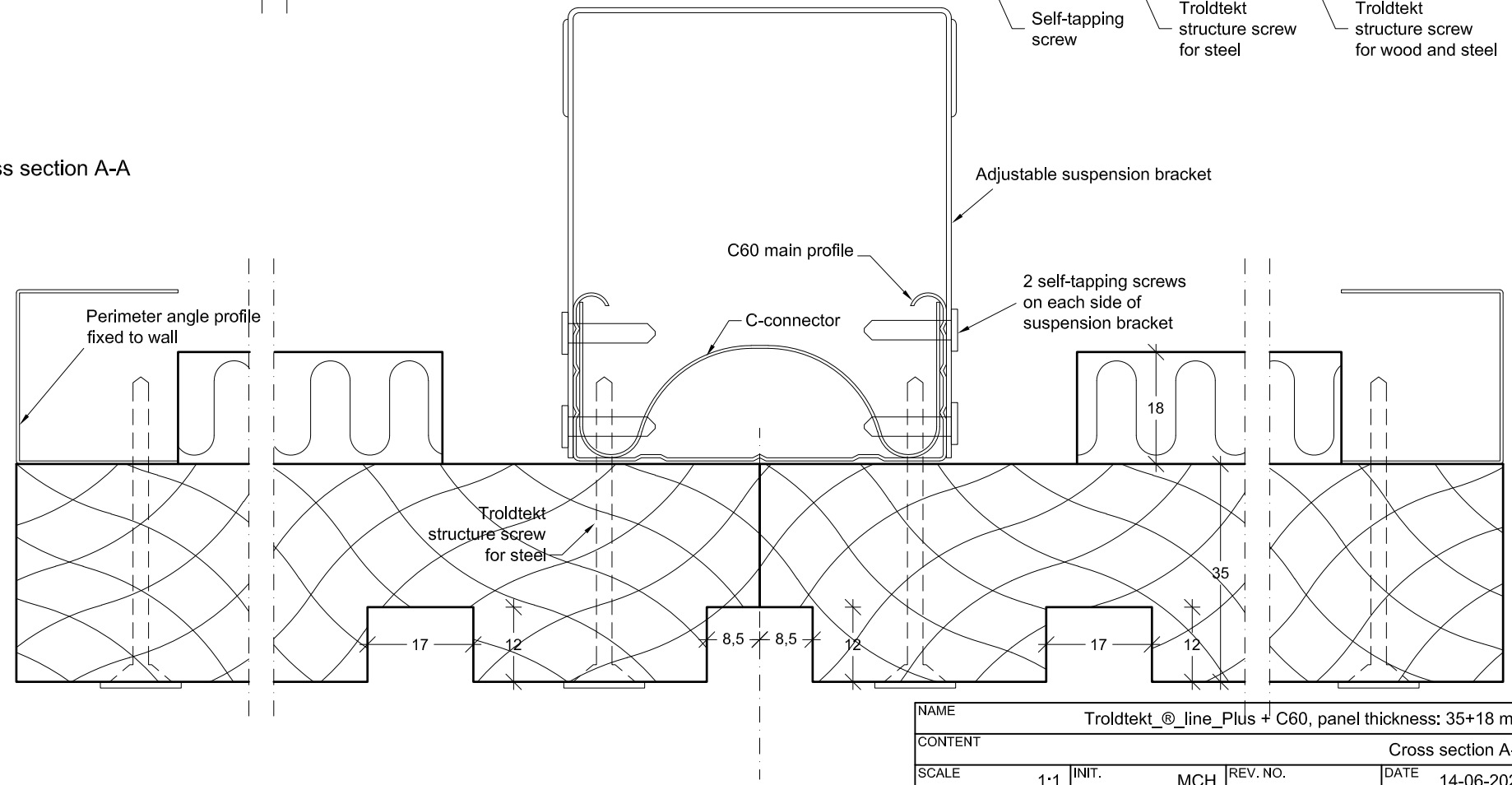


| | | | | |
|---|---|---|---|---|
| NAME | Troldtekt_®_line_Plus + C60, panel thickness: 35+18 mm | | | Troldtekt. |
| CONTENT | Cross section A-A | | | |
| SCALE 1:1 | INIT. MCH | REV. NO. | DATE 14-06-2021 | |

Troldtekt_®_line_c60var_35+18mm_EN.dwg

## Edge design

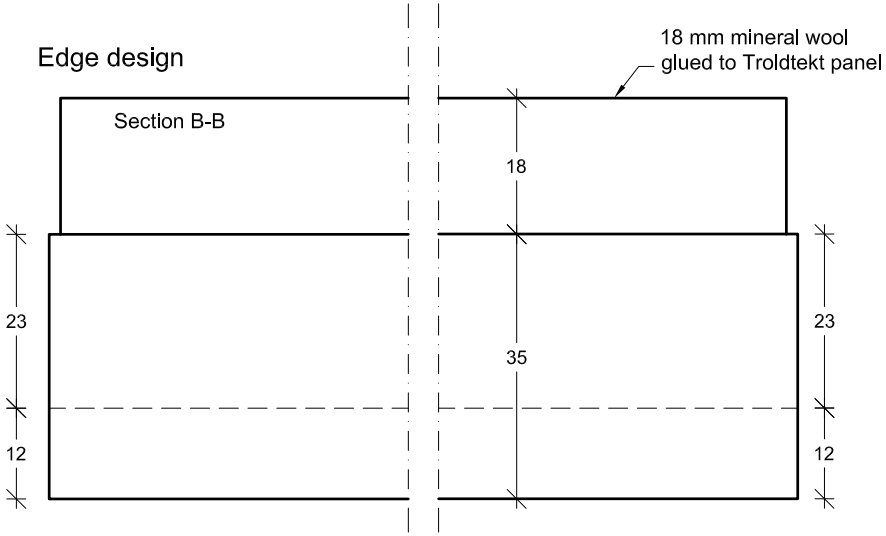


## Modular dimensions (mm) : 600 x 1200

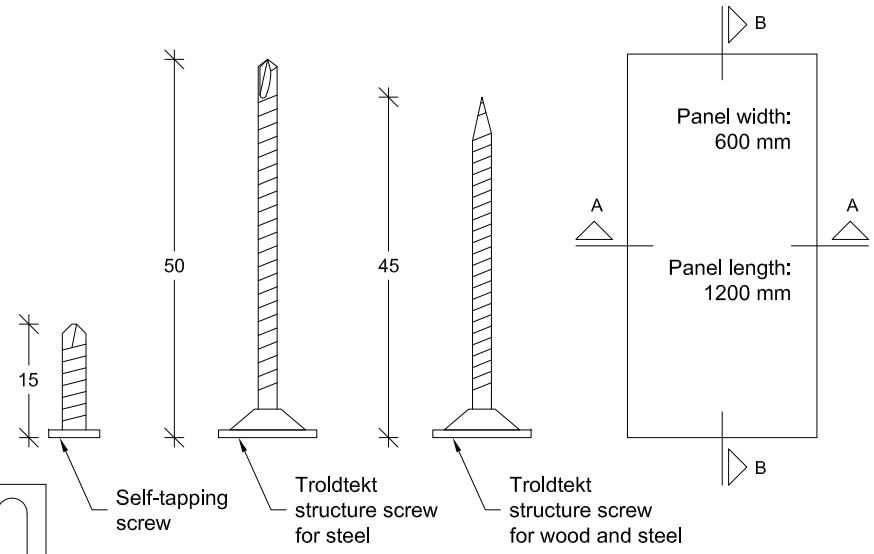


## Longitudinal section B-B

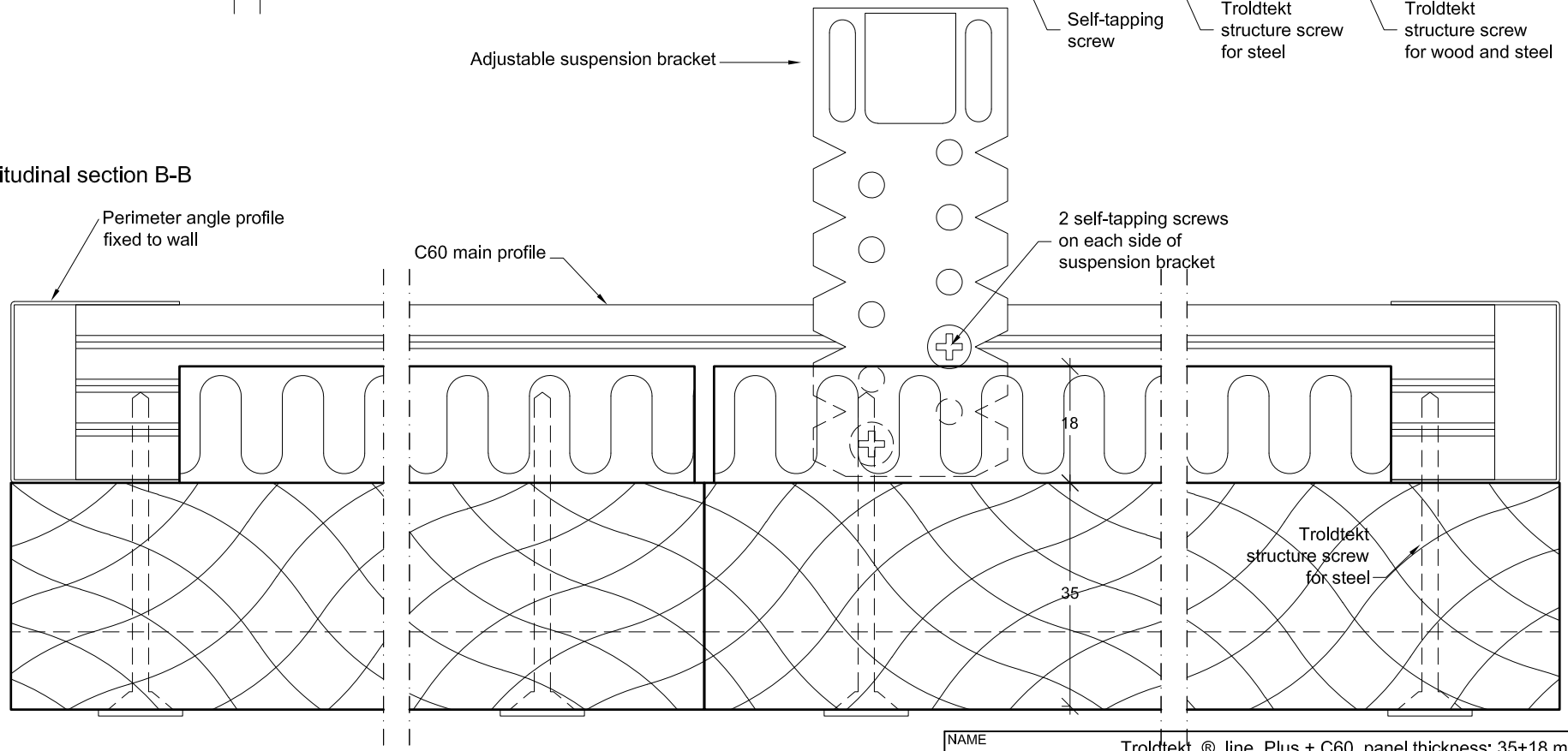


| | | | | |
|---|---|---|---|---|
| NAME | Troldtekt_®_line_Plus + C60, panel thickness: 35+18 mm | | | Troldtekt. |
| CONTENT | Longitudinal section B-B | | | |
| SCALE 1:1 | INIT. MCH | REV. NO. | DATE 14-06-2021 | |

Troldtekt_®_line_c60var_35+18mm_EN.dwg